ROBSTAR Oddział Dronexpert.eu & UAVO.TV
Authorised Reseller DJI
ul. Ożarowska 61, Warszawa
tel. 501832306, 507273177, 501750577

Dane aktualne na dzień: 23-04-2024 13:17

Link do produktu: https://dronexpert.eu/silnik-iflight-xing-22035-motor-black-protek-35-bumblebee-v3-p-14406.html

Silnik Iflight XING 2203.5 Motor black (Protek 35 BumbleBee v3)

Cena brutto	**90,29 zł**
Cena netto	**73,40 zł**
Dostępność	**Wysyłka 24 godziny/Odbiór osobisty**
Kod producenta	**X009221**
Producent	**IFLIGHT**

Opis produktu

PRODUCT DESCRIPTION

Features:

*5mm outer titanium alloy shaft

*Japanese NSK φ9*φ9*4 bearings

*N52H curved magnets

*Motor wires protected

*Dynamically balanced

Specification

- Model: XING 2203.5

- KV: 2500KV / 3600KV (select)

- Version: CW Screw Thread

- Input Voltage: 4S/6S Lipo

- Configuration: 12N14P

- Stator Diameter: 22mm

- Stator Length: 5mm

- Weight: 19.7g with short wire

- Wire length: 22AWG 150mm

- Mounting pattern: 16*16mm

Package includes:

1x XING 2203.5 Brushless Motor (KV is optional)

4x m3*6 screws

1x M5 Flanged Nylon Insert Lock Nut

NOTE: propeller does not include.

iFight XING 2203.5 3600KV

Technical Datas	
KV	3600
Configu-ration	12N14P
Stator Diamter	22mm
Stator Length	3.5mm
Shaft Diameter	5mm
Motor Dimension(Dia.*Le	Φ28.3*15.6mm
Weight(g)	22
Idle current(10)@5V(A)	0.72
No.of Cells(Lipo)	4S
Max Continuous Power(W)60S	491.4
Internal Resistance	61.7mΩ
Max Current (60S)	30.71A

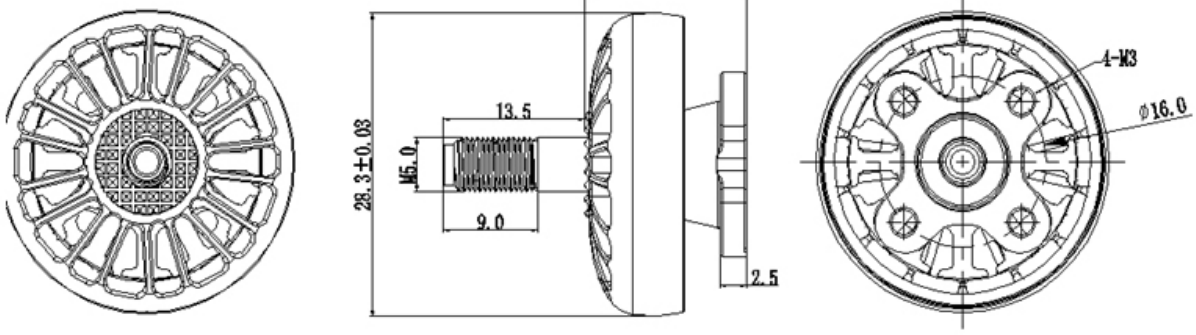

Prop (inch)	Voltages (V)	Throttle (%)	Load Currency (A)	Pull(g)	Power(W)	Efficiency(g/W)	Temperature (in full throttle load 1min)
3535	16	50%	7.11	303	113.8	2.664	54°
		60%	10.63	396	170.1	2.328	
		70%	15.43	513	246.9	2.078	
		80%	20.16	589	322.6	1.826	
		90%	25.53	684	408.5	1.675	
		100%	30.71	778	491.4	1.583	
■Airplane			☐Helicopter			■Vtol	

Produkt posiada dodatkowe opcje:

KV: 2500 kV φ 16